Beyond Pivoting with pivot rod, short type

30.100/30.101/30.120/30.121

Pivoting fitting set, short type Art. No. 30.100 for 10 mm glass
Art. No. 30.101 for 12 mm glass
with overpanel fitting wall connector Art. No. 30.120 for 10 mm glass
Art. No. 30.121 for 12 mm glass
Fittings for 10 and 12 mm glass thickness, 8 mm glass thickness on request
Door weight: max. 80kg

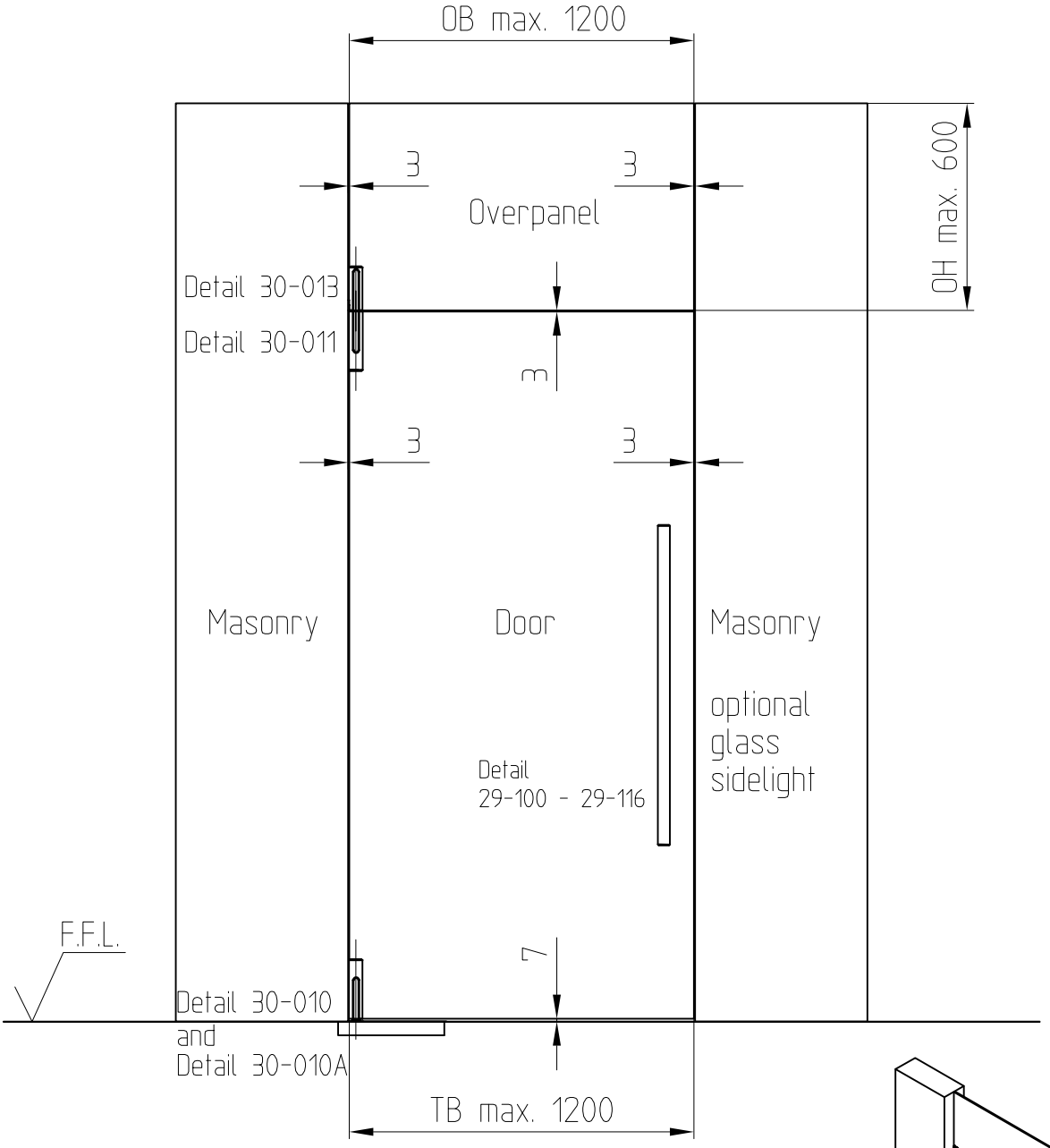

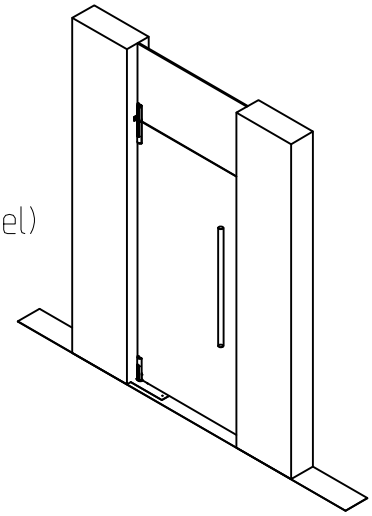

Detail glass preparation: 30-020 (Door) / 30-022 (Overpanel)

OB = overpanel width
OH = overpanel height
TB = door width

1:20

07.2022 / 016627

30-005

T:\Shared\DEBFN\Konstruktion_Interna\Detail\30\30-005.DWG

This document is protected by copyright. The content is the property of DORMA-Glas GmbH. All rights reserved.